CHARACTERISTICS / *EIGENSCHAFTEN*

MTJZ series are Z-axis Linear Units with tooth belt drive and Ball rail system. Compact dimensions provide high load capacities, high speed, accuracy and repeatability in vertical movements. These Linear units can also be combined to various multi-axes linear systems and ensure an excellent price/performance ratio with short delivery time.
A High accurately extruded compact aluminium profile of hard anodized Al 6063 alloy with an integrated Ball zero-clearance rail system enables high load moments and optimum running to move large loads at high speed. Aluminum profile contains T-slots for actuator and proximty switch fixing. T-slot suitable for reed switch too.
Linear Units MTJZ use a pre-tensioned AT polyurethane tooth belt with steel tension cords and Polyamide fabric on teeth. This type of linear belt is used together with a Zero-backlash pully to achive an excellent precision, high load transmission with dimensional stability, low noise and low wear.
The polyurethane belt protects internal parts against dust and foreign parts.
Drive block with motor flange and central lubrication port enables maintenance and possibility to attached various accessories.
Linear Units MTJZ are available with already pre-designed adapters for attachment of motor and gear reducer in various directions.

MTJZ시리즈는 상하운동시 적용가능하며, 타이밍밸트로 구동되는컴팩트한 구조로 높은 강성,고속,고정밀한 품질을 갖고 있다.
또한 다양하게 조합하여 다축구성이 용이한 구조이며, 성능대비 훌륭한 가격과 빠른 납기를 제공합니다.
고정밀한 알루미늄 프로파일은 하드아노다이징되어 있고, 그에 장착된 zero-clearence ball rail시스템은 고속으로 고하중을 운반하는데 최적화되어 있습니다.

프로파일의 T슬롯을 이용 유니트의 고정, 스위치의 장착이 용이합니다.
AT타입의 타이밍벨트는 zero backlash풀리와 더불어 정밀하고 큰 부하의 전달을 안정적으로 수행하도록하며, 소음과 마모를 아주 적게 만듭니다.

외부의 먼지와 이물질의 유입과 유출을 막을 수 있도록 corrision protection strip이 장착되어 있습니다.
캐리지는 2가지 길이로 공급되며, 다양한 부품장착이 가능하며, 중압집중윤활 포트가 준비되어 있습니다.
다양한 모타 또는 감속기를 취부가능하도록 adapter를 공급하고 있습니다.

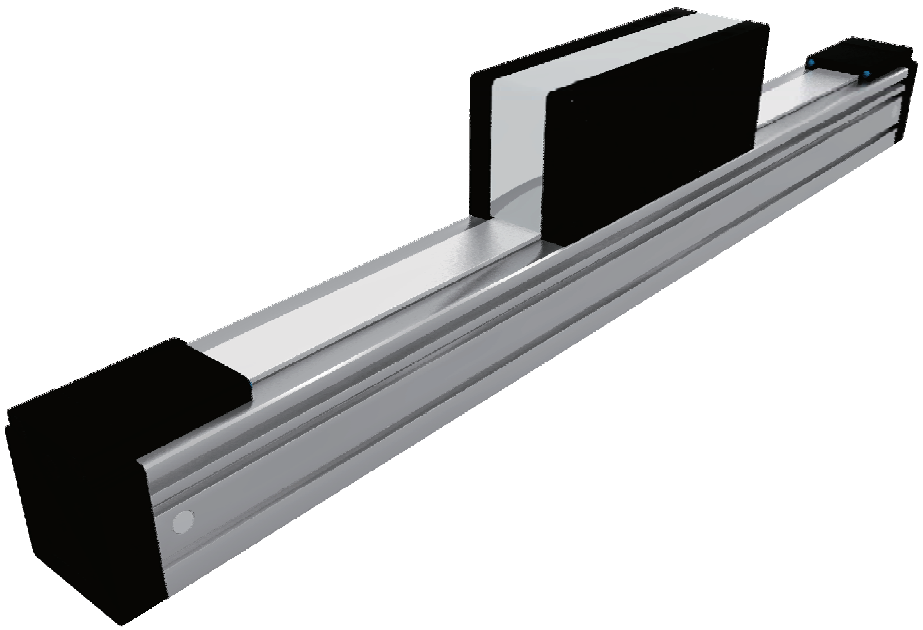

The specifications in order to improve the products in this catalogue are subject to change without notice.
Technische Änderungen die der Produktinnovation dienen, bleiben uns vorbehalten. Für Druckfehler übernehmen wir keine Haftung.

STRUCTURAL DESIGN / *AUFBAU*

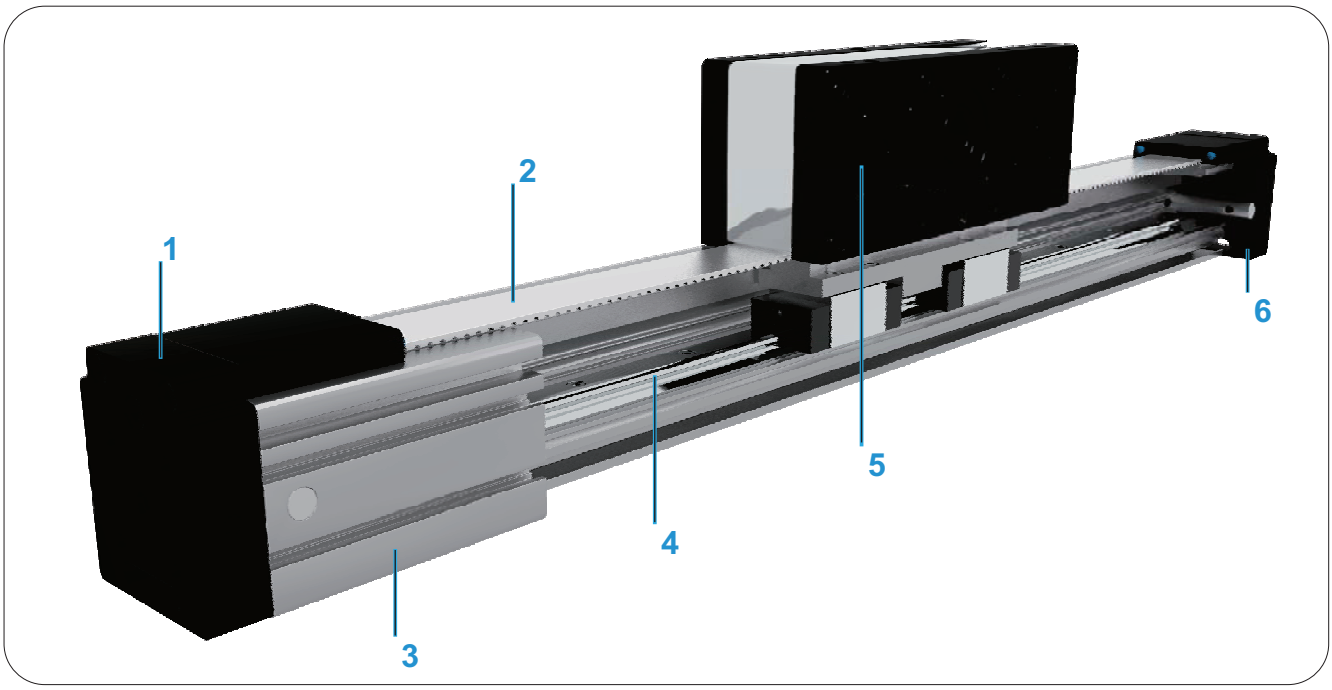

1 - Tension End with integrated belt tensionin system / *Endkopf Spannseite mit integriertem Reimenspann-system*
2 - AT polyurethane tooth belt with steel tension cords and Polyamide fabric on teeth / *AT Stahlverstärkter Zahnriemen aus Polyurethan mit Polyamide auf den Zähnen.*
3 - Aluminium profile-Hard anodized / *Aluminiumprofil-Harteloxiert*
4 - Linear Ball Guideway / *Kugelschienenführung*
5 - Drive block with pulley, Motor flange / *Antriebskopf mit Riemenscheibe, Motorflansche*
6 - Tension End with integrated belt tensionin system / *Endkopf Spannseite mit integriertem Reimenspann-system*

PRIMER NAROČANJA / HOW TO ORDER

MTJZ - 65 - 1000 - 1 - R

Series / *Baureihe*:

MTJZ

Size / *Baugröse*:

40- available soon / *verfügbar bald*

65

80- available soon / *verfügbar bald*

Effective stroke including safety (mm) *Hub effektiv inkl. Überlauf* (*mm*)

Type of drive pulley / *Antriebsart* :

0 : Pulley with through hole / *Antrieb mit Hohlwelle*

1 : Pulley with journal / *Antrieb mit Zapfen*

2 : Pulley with journal on both sides / *Antrieb mit Zapfen beidseitig*

Drive journal position / *Antriebsposition* :

L : Journal on left side / *Zapfen links*

R : Journal on right side / *Zapfen rechts*

Brez / Without : For type of drive pulley 0 and 2 / Für die Antriebsart 0 and 2

The specifications in order to improve the products in this catalogue are subject to change without notice.
Technische Änderungen die der Produktinnovation dienen, bleiben uns vorbehalten. Für Druckfehler übernehmen wir keine Haftung.

TECHNICAL DATA / *TECHNISCHE DATEN*

General technical data / Allgemeine technische Daten

Linear Unit Lineareinheit	Drive block length *Antriebskopf-länge* Lv [mm]	Load capacity *Tragzahl* Dynamic C [N]	Static C0 [N]	Dynamic moment *Dynamisches Moment* Mx [Nm]	My [Nm]	Mz [Nm]	Mass of drive block *Gewicht des Antriebskopfs* [kg]	Maximum Repeatability *Max.Wiederhol-genauigkeit* [mm]	Maximum stroke *Maximal Hub* Lmax [mm]	Planar moment of inertia *Flächenträgheits-moment* Iy [cm⁴]	Iz [cm⁴]
MTJZ 65	200	18658	39258	128	597	597	3,2	0,1	1200	59,8	73,78

*For lengths over the stated value in the table above please contact us / 위에 기술된 최대길이보다 길면 연락바랍니다.

Recommended values of loads / Empfohlene Belastungenswerte

All the data of static and dynamic moments and load capacities stated in the upper table are theoretical without considering any safety factor. We recommend a minimum safety factor (fv = 2.0)

위 테이블에 기술된 모든 데이터는 안전계수가 고려되지 않은 이론치입니다.

적용검토시 최소안전계수를 적용바랍니다.

추천안전계수(fv = 2.0).

Modulus of elasticity / *Elastizitätsmodul*

E = 70000 N / mm

2

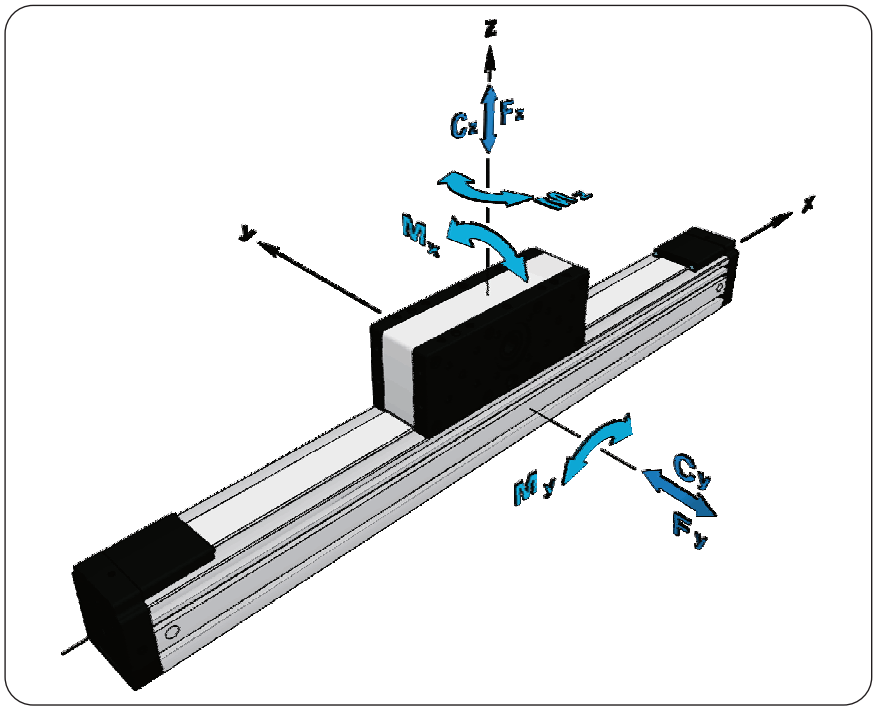

Drive and belt data / *Zahnriemen-und AntriebsdatenBaureihe*

Linear Unit Lineareinheit	Maximum travel speed *Maximale Geschwindikeit* [m / s]	Maximum drive torque *Maximal Antriebsmoment* [Nm]	Puley drive ratio *Hub pro Umdrehung* [mm / rev]	Pulley diameter Durchmesser der Riemenschei [mm]	Belt type *Riementyp*	Belt width *Riemen-breite* [mm]	Max. force transmited by belt *Maximale Riemen-betriebskraft* [N]	Limit of belt elasticity *Elastizitäts-grenze* [N]	Specific spring constant *Spezifische Federrate* Cspec [N]·
MTJZ 65	3	35,1	165	52,52	AT5	32	1200	2400	600000

Mass and mass moment of inertia / *Gewicht und Massenmoment der Trägheit*

Linear Unit Lineareinheit	Mass of linear unit *Gewicht der Lineareinheit* [kg]	Mass moment of inertia of drive block *Massenmoment der Trägheit vom Antriebskopf* [10^{-4} kg·m ^{2}]
MTJZ 65	5,6 + 0,0054·L [mm]	19,1 + 0,0374·L [mm]

Mass calculation doesn´t include mass of motor, reduction gear, switches and clamps.

위 무게계산에서 모타,감속기,스위치 그리고 클램프등은 포함되어 있지 않습니다.

The specifications in order to improve the products in this catalogue are subject to change without notice.
Technische Änderungen die der Produktinnovation dienen, bleiben uns vorbehalten. Für Druckfehler übernehmen wir keine Haftung.

DIMENSIONS / *ABMESSUNGEN*

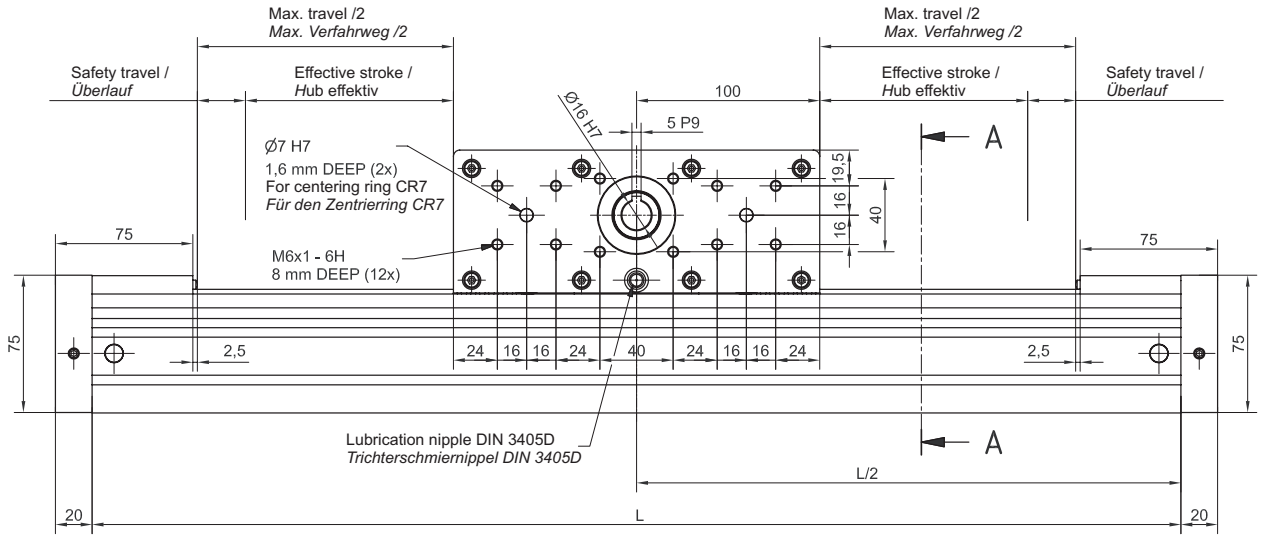

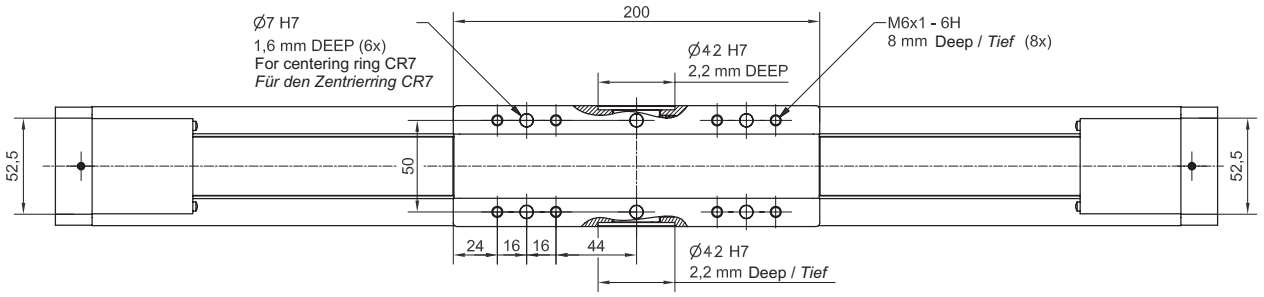

All dimensions are in mm. Drawings scales are not equal.

Alle Maße sind in mm. Darstellungen in unterschiedlichen Maßstäben

TIP / TYPE 0

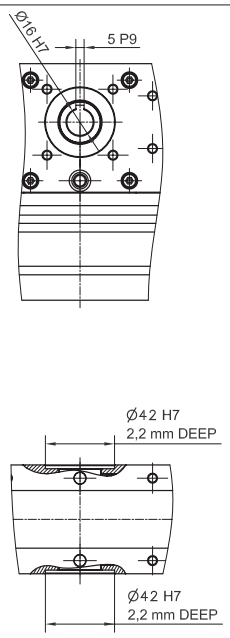

TIP / TYPE 1

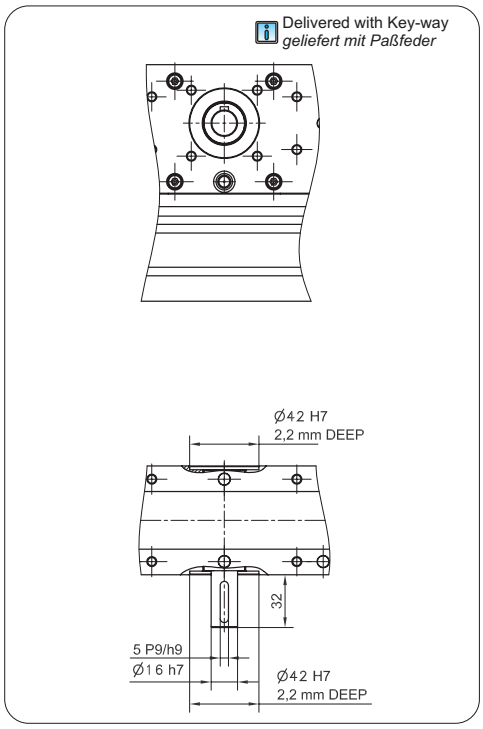

TIP / TYPE 2

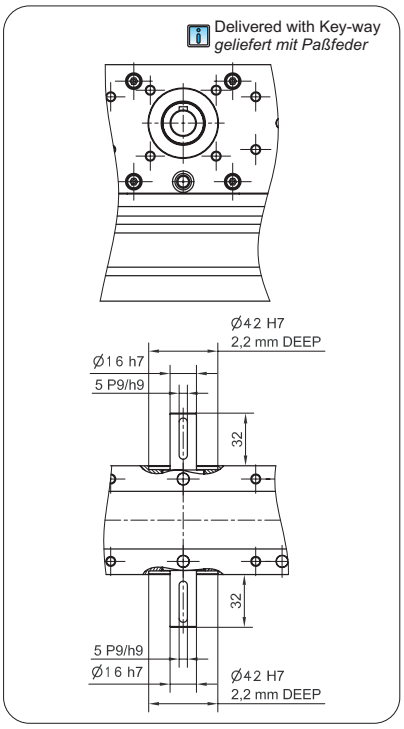

The specifications in order to improve the products in this catalogue are subject to change without notice.
Technische Änderungen die der Produktinnovation dienen, bleiben uns vorbehalten. Für Druckfehler übernehmen wir keine Haftung.

DIMENSIONS / *ABMESSUNGEN*

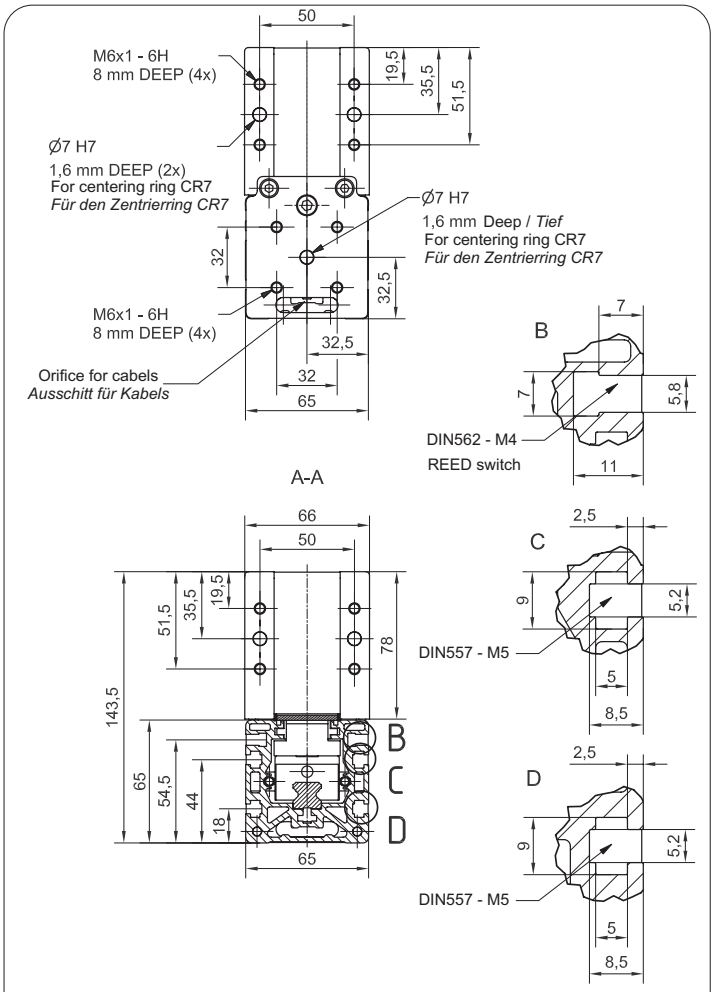

All dimensions are in mm. Drawings scales are not equal.

Alle Maße sind in mm. Darstellungen in unterschiedlichen Maßstäben

CENTERING RING / *ZENTRIERRING* CR7
Material: 1.4305 (AISI303)

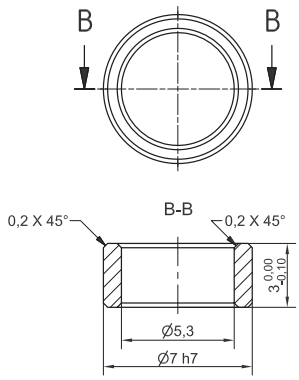

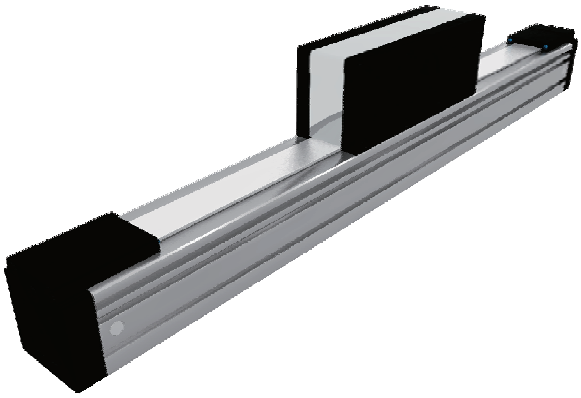

Defining of the linear module length / *Festlegung der Länge der Lineareinheit*

L = Effective stroke + 2 × Safety travel+ Lv + 315 mm

L = Hub effektiv + 2 × Überlauf + Lv + 315 mm

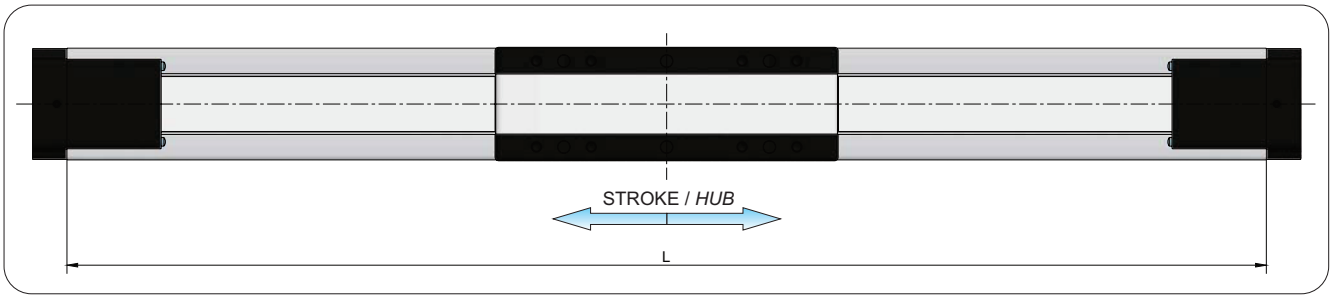

MOTOR	GEAR REDUCER + MOTOR	GEAR REDUCER 90° + MOTOR
MTJ & MRJ 65	**MTJ & MRJ 65**	**MTJ & MRJ 65**
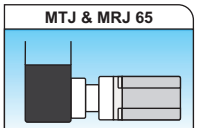	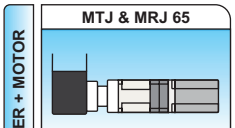	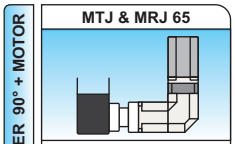
Available on request	**Available on request**	**Available on request**
Verfügbarkeit (Lieferzeit) auf Anfrage	***Verfügbarkeit (Lieferzeit) auf Anfrage***	***Verfügbarkeit (Lieferzeit) auf Anfrage***

The specifications in order to improve the products in this catalogue are subject to change without notice.
Technische Änderungen die der Produktinnovation dienen, bleiben uns vorbehalten. Für Druckfehler übernehmen wir keine Haftung.